IP Link® Device Interface Communication Sheet

This document provides additional assistance with wiring your Extron IP Link enabled product to your device. Different components may require a different wiring scheme than those listed below.

For complete operating instructions, refer to the user's manual for the specific Extron IP Link enabled product or the controlled device manufacturer supplied documentation.

Device Specifications:

Device Type: Video Projector
Manufacturer: Eiki
Firmware Version: N/A
Model(s): LC-XNB4000N

Version History:

Driver Version	Date	IP Link Compiler	GC Version	Notes
1	1/20/2014	1.6.0	3.5.1	Initial version.

Driver Notes:

Control Commands & States:

Audio Mute	On	Off	
Auto Image	Execute		
Freeze	On	Off	
Input	Computer 1	Computer 2	YPbPr
	HDMI	Video	S-Video
	Component		
Menu Navigation	Up	Down	Left
	Right	Menu	
Power Control	On	Off	
Video Mute	On	Off	
Volume (Step)	Up	Down	

Status Available:

Connection Status	Connected	Disconnected	
Device Status	Normal	Lamp Temp Switch Fail	Lamp Cover Error
	Lamp Failure	Exhaust Fan Fail	Lamp Blower Failure
	Image Blower Fail	Inlet Temp Sensor Fail	Image Temp Sensor Fail
	Lamp Temp Sensor Fail	Blank Feature Time Out	No Signal Present
	Status Unavailable		
Filter Usage	Hours		
Input	Computer 1	Computer 2	YPbPr
	HDMI	Video	S-Video
	Component		
Lamp Usage	Hours		
Power Control	On	Off	
Power Status	On	Off	Cooling Down
	Warming Up	Status Unavailable	

MLC60 Series Supported Commands:

Audio Mute	On	Off	
Auto Image	Execute		
Freeze	On	Off	
Input	Computer 1	Computer 2	YPbPr
	HDMI	Video	S-Video
	Component		
Menu Navigation	Up	Down	Left
	Right	Menu	
Power Control	On	Off	
Video Mute	On	Off	
Volume (Step)	Up	Down	

Cable and Adapter Requirements:

M/F RS-232 Null Serial Cable

Notes for the Device:

Serial communication:

Port Type:	RS-232	**Parity:**	None
Baud Rate:	9600	**Stop Bits:**	1
Data Bits:	8	**Flow Control:**	None

Pin Assignments Diagram:

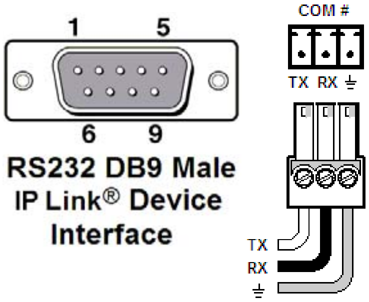

Signal	Pin	Main Cable	Pin	Signal
RxD TxD GND	2 3 5		2 3 5	RxD TxD GND

Note: Captive screw connector may also be used as a serial connection.

General Notes: